FS OR-G-CO3

FS OR-G-CO4

47.75” width

83.75” height

BS

OR-G-CO1

bleed area
trim line

47.75” width

Clio
10’ x 10’ Truss System
Dye Sub Printed

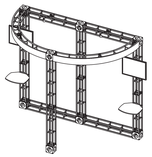

Panels CO1 and CO2:
Total Graphic Area: 51.75”w x 87.75”h
Finished Size: 47.75”w x 83.75”h
Visual Size: 45.75”w x 81.75”h

Panels CO3 and CO4:
Total Graphic Area: 86.5”w x 10”h
Finished Size: 82.5”w x 6”h
Visual Size: 82.5”w x 6”h

Template requires 2” bleed
around the perimeter

FS = Graphic is front side mounted
(3/4” w velcro is applied to the back
of the panel)
BS = Graphic is back side mounted
(3/4”w velcro is applied to the front
of the panel)
Notching = 7/8” square that is cut into the
appropriate location.
Hinging= 3/4” strip of material that is created
by notching the graphic. Allows two graphics
to share the same extrusion corner.

General Art Guidelines:

- CMYK Color Mode
- All Solid Coated Pantone colors should be called out in the art as spot colors
- Embed all images and support files
- Resolution must be 100-120ppi
- All fonts must be created to outlines
- Do not scale artboard
- Background color/images must bleed to the edge of artboard
- Do not use spot colors from template in your artwork as they will not print

BS

OR-G-CO2

gray area will
be obstructed
once finished
and mounted

BS

OR-G-CO1

bleed area

trim line

Clio
10′ x 10′ Truss System
Dye Sub Printed

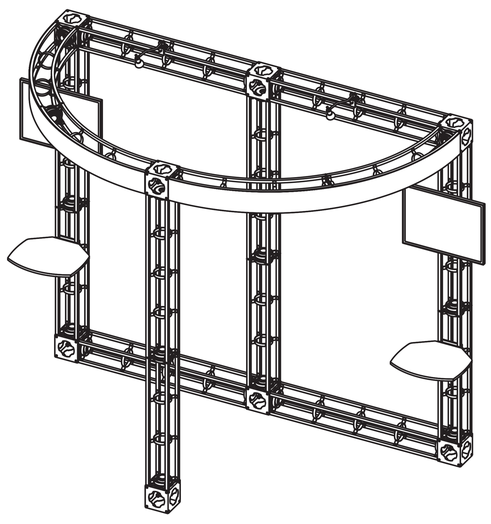

Panels CO1 and CO2:
Total Graphic Area: 51.75″w x 87.75″h
Finished Size: 47.75″w x 83.75″h
Visual Size: 45.75″w x 81.75″h

Panels CO3 and CO4:
Total Graphic Area: 86.5″w x 10″h
Finished Size: 82.5″w x 6″h
Visual Size: 82.5″w x 6″h

Template requires 2″ bleed
around the perimeter

FS = Graphic is front side mounted
(3/4″ w velcro is applied to the back
of the panel)
BS = Graphic is back side mounted
(3/4″w velcro is applied to the front
of the panel)
Notching = 7/8″ square that is cut into the
appropriate location.
Hinging= 3/4″ strip of material that is created
by notching the graphic. Allows two graphics
to share the same extrusion corner.

General Art Guidelines:

- CMYK Color Mode
- All Solid Coated Pantone colors should be called out in the art as spot colors
- Embed all images and support files
- Resolution must be 100-120ppi
- All fonts must be created to outlines
- Do not scale artboard
- Background color/images must bleed to the edge of artboard
- Do not use spot colors from template in your artwork as they will not print

BS
OR-G-CO2

gray area will
be obstructed
once finished
and mounted

FS OR-G-CO3

FS OR-G-CO4